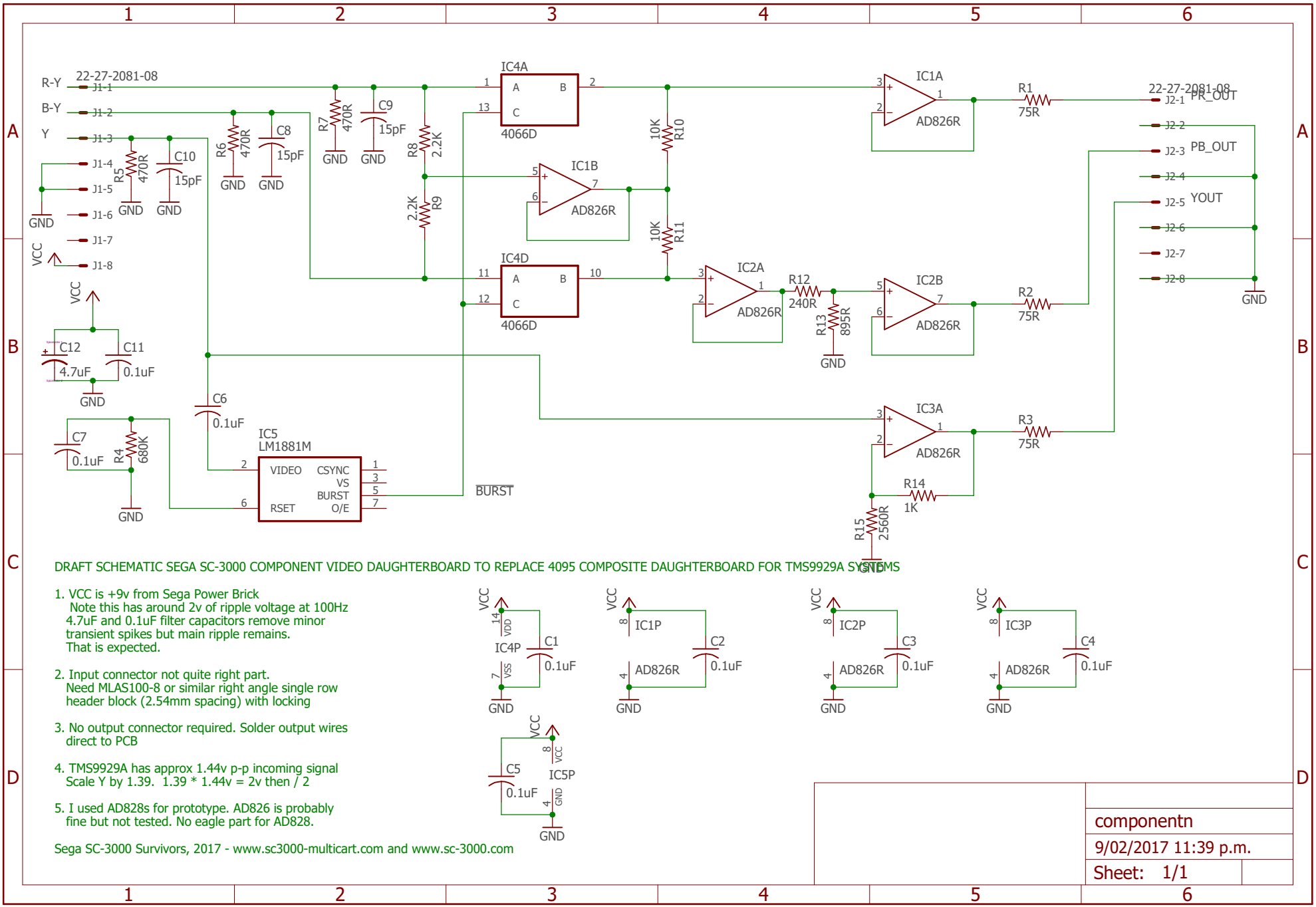

9/02/2017 11:40 p.m. C:\Users\nick\Documents\eagle\ComponentVideo\componentn.sch (Sheet: 1/1)